Modeling and Studying FIDVR Events

Western Electricity Coordinating Council
Modeling and Validation Work Group

White Paper

December 5, 2010

I. OBJECTIVES

The objective of this paper is to inform the operating and planning entities within WECC on the development of the composite load model, the model applicability to the studies of Fault-Induced Delayed Voltage Recovery (FIDVR), and potential implications to the reliability criteria. The paper also makes recommendations on improving FIDVR monitoring, load model validation, steps towards load model implementation, and reliability criteria review.

II. BACKGROUND

Fault-Induced Delayed Voltage Recovery is a phenomenon when the power system voltages remain at substantially reduced levels several seconds after a transmission fault is cleared [1]. FIDVR events have been observed in Southern California, Arizona, Texas, Florida, and the southeastern part of US [1-7]. Figure 1 shows an example of the voltage profile during a FIDVR event in southern California. The phenomenon has received attention in the power industry in recent years, including NERC publication of the white paper on delayed voltage recovery [1], and two DOE-NERC workshops [2, 3].

FIDVR is caused by wide-spread stalling of residential single-phase air-conditioners. Residential air-conditioners can stall in less than two cycles, which is faster than clearing time for transmission faults. Once a single-phase air-conditioner compressor stalls, it will draw a locked rotor current 4 to 6 times of rated, thereby depressing voltages in distribution, sub-transmission and main power grid. One can visualize stalled air-conditioners as a wide-area high impedance distributed fault. Prolonged voltage depression represents a reliability threat due to increased risk of losing power plants, SVCs, HVDC lines, and ultimately disturbance cascading. Also, prolonged voltage depression can result in the interruption of customer's processes. As air-conditioners trip by its internal thermal protection, there is a risk of over-voltages and possible equipment damage.

Accurate load models are needed to study FIDVR events. It was recognized that the WECC "interim" load model [8] was insufficient in representing the FIDVR phenomenon. The "interim" model was developed to address urgent operational issues

related to the North-South power oscillations during summer operating period. Even during the "interim" model approval, the need for a more comprehensive load model was argued. Modeling and Validation Work group led the development of the new load model in WECC [9]. This multi-year effort included testing residential air-conditioner and developing models to represent them in the positive sequence grid simulators. Today, the composite load model structure is implemented in all positive sequence simulators used in WECC – GE PSLF, Siemens PTI PSS®E, and PowerTech TSAT packages. Figure 2 shows the proposed composite load model structure. The new composite load model structure was successfully validated for several FIDVR events in Southern California, Figure 3.

III. CHALLENGES

No model development is complete until the limitations of model applicability and accuracy are identified. It is important to recognize the limitations of the power system models and positive sequence simulators with respect to FIDVR simulation:

- *Fault details do matter*
  Power system loads can change their state during a fault. A portion of motor load can change from a running state to a stalled state. A portion of motor and electronic load can be tripped by contactors and relays. The fault details do matter – not only duration, as in the angular stability studies, but things like what part of waveform the fault is applied and how a transmission fault is seen at the distribution level. Positive sequence simulators do not represent this amount of detail, nor is it practical to attempt modeling these details in grid-level studies.

- *Structural limitations of composite load model*
  Loads are very complex, as they include a wide variety end-uses spread over a distribution network. A load model has to balance the need for simplicity of implementation and data management with the need for reasonable accuracy in representing load responses to grid disturbances. The WECC composite load model structure, Figure 3, has two essential features (i) the model represents electrical distance between transmission system and end-uses, (ii) the model represents the diversity in characteristics of electrical end-uses. The composite load model has a simplified approximation of the actual distribution systems with an equivalent impedance. Studies comparing the composite load model with a detailed distribution model show that, while the composite load model captures in principle the load response to disturbances, it does not capture full detail of the response, even when the perfect information is available on load composition and feeder structure.

- *Load Model Data Uncertainties*
  FIDVR studies are sensitive with respect to assumptions made on load composition and load protection. Load composition varies hourly, daily, seasonally, and it is not practical (or even possible) to know precisely the load composition for every feeder. Once again, the model can represent the response in principle but not the detail.

- *Power plant behavior*
  The ability of power plants to ride through disturbances is a critical factor in evaluating reliability risks of FIDVR events. NERC is developing a performance standard requiring power plants to ride-through off-nominal voltage, Figure 6. The standard will apply to all new power plants, and the existing power plants will be required to review their relay settings and to provide an opinion whether their plant meets the requirement. Unfortunately, there are many actual cases when power plants trip following a fault due to a variety of reasons – from boiler instability to inadvertent control action, e.g. power load unbalance, to auxiliary motor tripping to power supply switch failure. It is not practical or possible to model all the details of power plant control system and their operational models. The bottom line is that there is a risk of power plant tripping following a fault or during a FIDVR event, and the impacts of plant tripping must be recognized in FIDVR risk assessment.

- *Lack of events and data for model validation*
  Lack of quality disturbance recordings is hindering the model validation efforts. FIDVR analysis requires high-speed data:
    - Continuously streaming synchro-phasor data sampled at least 60 times per second, complemented with
    - Archived point-on-wave data sampled at least 16 times per cycle and the record length of at least 60 seconds

  It will be very useful to have the recordings from the main grid substations, load serving substations, power plants, SVCs, HVDC terminals, an even power end-users to develop the full understanding of FIDVR phenomenon.
  Up to know, mainly SCE provided data recordings for FIDVR events, APS provided data for one event. The data is from main-grid substations only.

- *Positive-sequence simulator limitations*
  Positive sequence simulators were originally developed to study angular stability of synchronous generators. Over the past 40-years, the use of the dynamic simulators was expanded to study inter-area power oscillations, under-frequency events, and even mid-term dynamics. The commonly used grid simulators are designed for presentation of the symmetric three-phase loads, and the composite load model assumes identical single-phase loads in each of the phases. Such representation is plausible for studying symmetrical disturbances, e.g. three-phase faults, generation outages. SCE experience shows that single-phase faults, e.g. caused by lightning strikes, can cause FIDVR. Many model validation studies and NERC Standards require studies of asymmetric faults with delayed clearing, designated as Category C events. Asymmetric faults will cause un-balanced response of the single-phase loads during the fault and after the fault is cleared. The current practice is to study unbalanced faults by adding the fault impedance equal to the negative + zero sequence fault impedance. While, such practice is acceptable for studying angular stability, it is not appropriate for FIDVR studies initiated by asymmetric faults.

Studies show that the developed composite load model will capture the FIDVR phenomenon in principle. The model, after careful tuning, can also reproduce the details of past events. However, predicting the details of the future FIDVR events may not be possible.

Composite load model will certainly capture stalled air-conditioners in the vicinity of a fault. However, the model may not be able to indicate reliably whether the air-conditioners stall at the perimeter of a fault and how far the stalling phenomenon spreads. And the spread of stalling matters a lot according to the studies done thus far.

IV. NEXT STEPS

1. Improve FIDVR monitoring in the Western Interconnection.

Many WECC utilities are in process of deploying and expanding their synchronized phasor measurement, or PMU, networks. Synchronized voltage and current phasor measurements are calculated 60 to 120 times each second and provide unprecedented visibility of power system dynamic performance, including FIDVR phenomenon. Availability of PMU data is one of the major reasons why Southern California Edison was able to detect FIDVR events in their territory. The PMU data has been invaluable for the development and validation of the composite load model. Unfortunately, very little PMU data is currently available outside Southern California for FIDVR analysis and modeling.

Vicke VanZandat said well “We are data rich and information poor”, referring to terra-bytes of synchro-phasor data collected and archived each year with no intelligent analysis performed. MVWG will develop a “data mining tool” that will scan either near real-time or archived synchro-phasor data for FIDVR events. When a FIDVR occurrence is detected, a log will be created for further analysis by engineering staff. Our goal is to develop and deploy the FIDVR alarm by 2011 summer operating season.

Because of the single-phase nature of loads, the point-on-wave data, in addition to the positive sequence data provided by PMUs, is very useful for analyzing FIDVR events. “Extended DFR” capability is needed with an archival record length of 30 to 60 seconds triggered on under-voltage. The extended DFR / PMU capabilities are particularly needed at the load serving substations, Static Var Compensators, and HVDC converter stations, because of their high-speed responses and the effects of phase imbalances.

Initial studies show that power plant dynamic performance and disturbance ride-through are of critical importance during FIDVR events. Availability of PMU-type recordings of generator stator and field quantities, as well as control signals, will be very useful for analysis and understanding of power plant responses. Including PMU requirements in utilities’ interconnection standards is very encouraged to enable monitoring of power

plant dynamic performance. Disturbance data can be also used for power plant model validation.

Finally, low-cost time-synchronized extended DFR devices can be plugged in the power sockets in various residential and commercial buildings. The devices will save the point-on-wave disturbance data at the rates of 32 samples per each cycle or faster, with each record of at least 60 seconds. The data will be saved locally and be accessible through an internet connection for uploading. This information will be very useful for better understanding of how FIDVR propagates through distribution systems.

Availability of PMU and extended DFR recordings will certainly improve the load model validation and will improve the confidence of engineers in their study results.

2. Continue improvement of power system models with respect to FIDVR

WECC MVWG will continue efforts on improving power system models with respect to FIDVR:

- MVWG to continue model validation studies of system events. It is important to study not only events which caused FIDVR, but also faults that did not result in FIDVR. Availability of PMU and extended DFR data from load serving substations, power plants, SVCs and HVDC terminals is essential for any model validation efforts.
- MVWG to perform analysis of power plant protection, control limiters and ride-through capabilities during faults and FIDVR events.
- MVWG will continue improving knowledge of electronic and motor load protection.
- MVWG will continue improving information on load composition.
- MVWG will develop a recommendation on how to represent unbalanced faults with delayed clearing, such as required for Category C, with respect to FIDVR analysis in positive-sequence dynamic simulators.
- EMTP level modeling will be very useful in improving the understanding of the load behavior during system faults, particularly unbalanced conditions. Detailed EMTP-level modeling is needed for gaining understanding of how air-conditioners stalling is affected by the distribution system design. Detailed EMTP-level level modeling is encouraged for FIDVR risk assessment in the load areas with high exposure.

3. Introducing composite load model to planning and operating entities in WECC

While model validation and improvements need to continue and will continue, it is time to make the composite load model available for planning and operating engineers for performance evaluation. MVWG proposal:

- MVWG will prepare composite load model data files with “default” data for study cases in CY 2011 program. WECC study engineers will evaluate the model performance and provide their feedback to MVWG. WECC study engineers will also

use the model to understand the FIDVR risks, and potentially to test their investment plans.

- MVWG will complete the development of tools for load model data management and transfer the tools to SRWG and WECC staff
- MVWG will conduct WECC workshops on load modeling

4. FIDVR risk metrics

Transmission planners and operators need a performance metric to make investment decisions, to plan and to operate the power system. FIDVR phenomenon is real, it is known to occur including faults with normal clearing. The reliability metric must address the FIDVR risks. Currently, power system dynamic performance is evaluated against the WECC minimum voltage dip criterion. The criterion specifies depth and duration of acceptable voltage swings for Category B and C events. The criterion was developed as a proxy for angular stability [16]. The criterion may still be an appropriate measure of power system performance during power system swings. The criterion does not seem to be appropriate for quantifying FIDVR risks. Figure 4 compares voltage profiles during a power swing and a FIDVR event.

Southern Company used the following FIDVR performance measures [15]:

- For category B events:
    - Voltage at all transmission busses must recover above 80% within 2 seconds of a contingency
- UVLS application criteria for Category D events:
    - Generating plant substation voltages must recover to within 80% of pre-contingency within 2 seconds
    - Load serving substation must recover to within 80% of pre-contingency voltage within 4 seconds
    - No system voltages are allowed to settle at less than 0.95 per unit.

We believe this is a very good starting point to build on.

Southern Company used the following FIDVR performance measures [15]:

- For category B events:
    - Voltage at all transmission busses must recover above 80% within 2 seconds of a contingency
- UVLS application criteria for Category D events:
    - Generating plant substation voltages must recover to within 80% of pre-contingency within 2 seconds
    - Load serving substation must recover to within 80% of pre-contingency voltage within 4 seconds
    - No system voltages are allowed to settle at less than 0.95 per unit.

Let's discuss the reliability implications of prolonged low voltages, and set the model aside for now. The implications can be grouped into:

a) Customer impacts

b) Bulk transmission reliability

CBEMA curves, Figure 5, represent an example of off-nominal voltage tolerance for electronic loads. There is an apparent disconnect between the electronic load voltage sensitivity and what the grid can provide. Electronic equipment designed according with CBEMA curve will not be able to ride through a nearby transmission fault with normal clearing (usually 3 to 5 cycles, depending on the voltage class).

From the bulk transmission reliability prospective, "no cascading" is the primary objective. With that in mind, the secondary objective could be stated as "to minimize the probability of unpredictable", because the unpredictable events ultimately lead to the disturbance cascading. The "unpredictable" events can result from prolonged low voltage conditions include:

- Power plant and SVC tripping. Power plants and SVCs are dynamic reactive resources that provide critical voltage support during a FIDVR event. Tripping a power plant or and SVC during a FIDVR event may result in the disturbance cascading if there are no other dynamic resources in a load center to pick-up the slack.
    - NERC is developing a disturbance ride-through standard for power plants. Figure 6 shows a currently proposed voltage ride-through envelope. The ride-through curve is normally representative of the capabilities of the auxiliary equipment to withstand low voltages. The presumption is that the loss of plant auxiliaries is most likely to lead to a power plant outage. All new power plants will be designed to comply with the standard. The existing power plants will provide an opinion on whether the plant can ride-through such voltage profile.
    - A generator will respond to low grid voltages by raising its field current. For a severe FIDVR, the field current is likely to exceed the generator continuous capabilities. ANSI standard defines the time-over-current capabilities for round rotor generators. Over-excitation limiters and over-excitation protection are normally coordinated with the ANSI curve. The intent of NERC standard PRC-019 is to address the control and protection coordination issues. If a FIDVR lasts longer then the over-excitation limiter settings, the OEL action will occur. The OEL action will depend on the type of the limiter used. The modern excitation control will reduce the filed current down below its continuous current rating, while older controls may trip the voltage regulator to manual control. Reducing the filed current will reduce the generator reactive power output and, thereby, can precipitate further voltage decline or collapse.
        - OEL settings can be adjusted for air temperature (for air-cooled units) and hydrogen pressure (for hydrogen pressure).
        - If OEL does not reduce the field current in time, over-excitation protection will trip the unit.
    - A generator stator current can exceed its continuous rating because of high reactive power output. A generator, particularly with modern controls, is

likely to have a stator over-current limiter that will reduce the generator reactive power to stay within the generator stator current limit.
    - Operator actions can also come into play if depressed voltages last for too long. As stator / field over-current alarms are received, an operator can take actions to protect generating equipment by reducing its reactive power output.
- HVDC line tripping or commutation failure. HVDC inverter can experience commutation failures during depressed ac system voltages.
- Line relaying. FIDVR is accompanied by low voltages and high reactive currents, a condition that is similar to a fault. In fact, FIDVR can be looked at as a wide-area distributed high impedance fault. Therefore, a pro-longed FIDVR event may case line protection, to false operate particularly Zone 2 and, if used, Zone 3. Line relaying will make things worse and may start disturbance cascading. E.g. relaying of Amps 230-kV line forced voltage collapse in Boise Idaho, which later cascaded into California-Oregon Intertie.

As air-conditioners trip by thermal protection, the risks change. High voltages will be seen across the system. Modeling generator Under-Excitation Limiters is required. High voltages can result in equipment tripping by over-voltage protection. Volts per Hertz limiters and protection of generators and transformers may come in the play. It must be also noted that opening shunt capacitor breakers may not be possible if voltages become too high.

It is clear that a singular voltage-based criterion may not be the right measure of capturing FIDVR reliability risks. A more comprehensive metric is likely to be needed, including monitoring:

- Generator auxiliary bus voltages
- Generator stator current
- Generator field current
- HVDC converter AC voltages, DC voltages and extinction angle
- Load bus voltages

Now, let’s bring back the model issue.

Power system performance is checked against a power system model. Section III discussed the limitation of models and grid simulators with respect to FIDVR representation. At present state, the model can represent the phenomenon in principle, but we have less confidence in the model’s ability to capture the FIDVR details.

Our experience shows that when the system is close to collapse, a small change in modeling assumption results in large changes in the simulated system response. Sensitivity studies are therefore encouraged, specifically:

- sensitivities with respect to load composition
- sensitivities with respect to motor protection

While the efforts on improving the model accuracy should continue and will continue, is there another angle. Recognizing model limitations, "I want to design a power system whose stability is not dependent on the availability of precise models." Scenario planning must be included in FIDVR risk analysis. Category D events must be studied as a part of scenario planning. Studies should include a loss of a power plant, SVC, or HVDC terminal during a FIDVR event, if such are determined likely by a study engineer. Safety nets need to be seriously considered for minimizing the FIDVR reliability risks.

V. CONTACT

Please provide your comments on the white paper to:

- Dmitry Kosterev, dnkosterev@bpa.gov
- Donald Davies, donald@wecc.biz

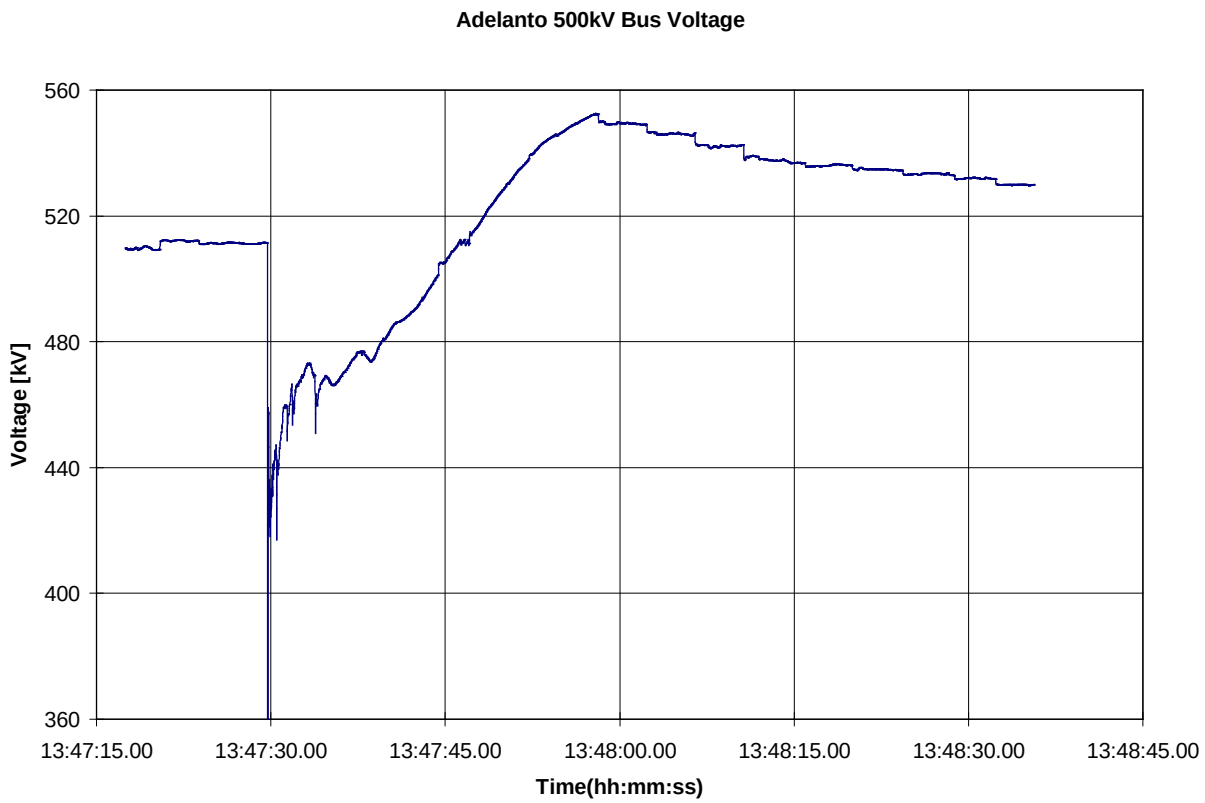

-

Figure 1: FIDVR event in Southern California on August 5 1997

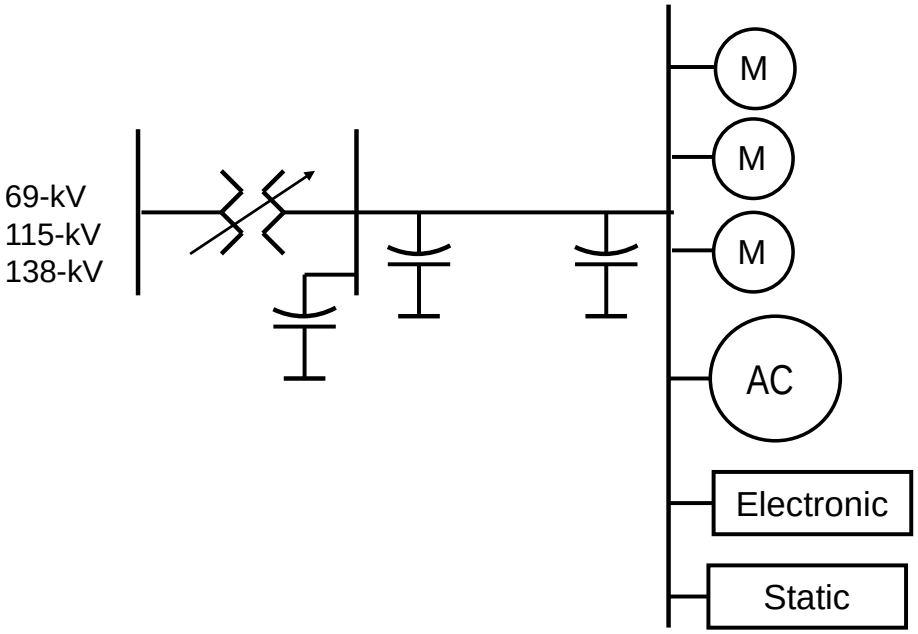

Figure 2: WECC composite load model

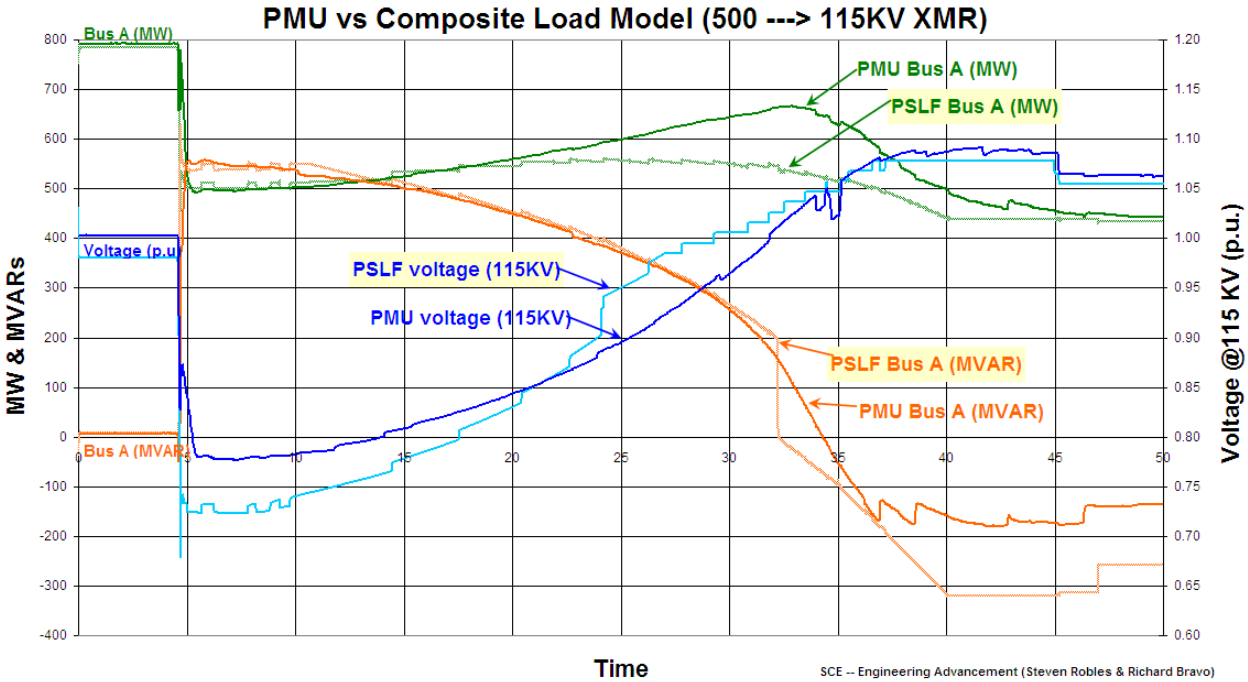

Figure 3: WECC composite load model validation study

Palo Verde –Devers fault on July 1 2006:
Blue lines are actual and simulated voltages at 500-kV bus
Green lines are actual and simulated active power through 500 to 115 kV transformers
Red lines are actual and simulated reactive power through 500 to 115 kV transformers

Figure 4: simulation of Palo Verde event (replace after reactive switching is modeled)

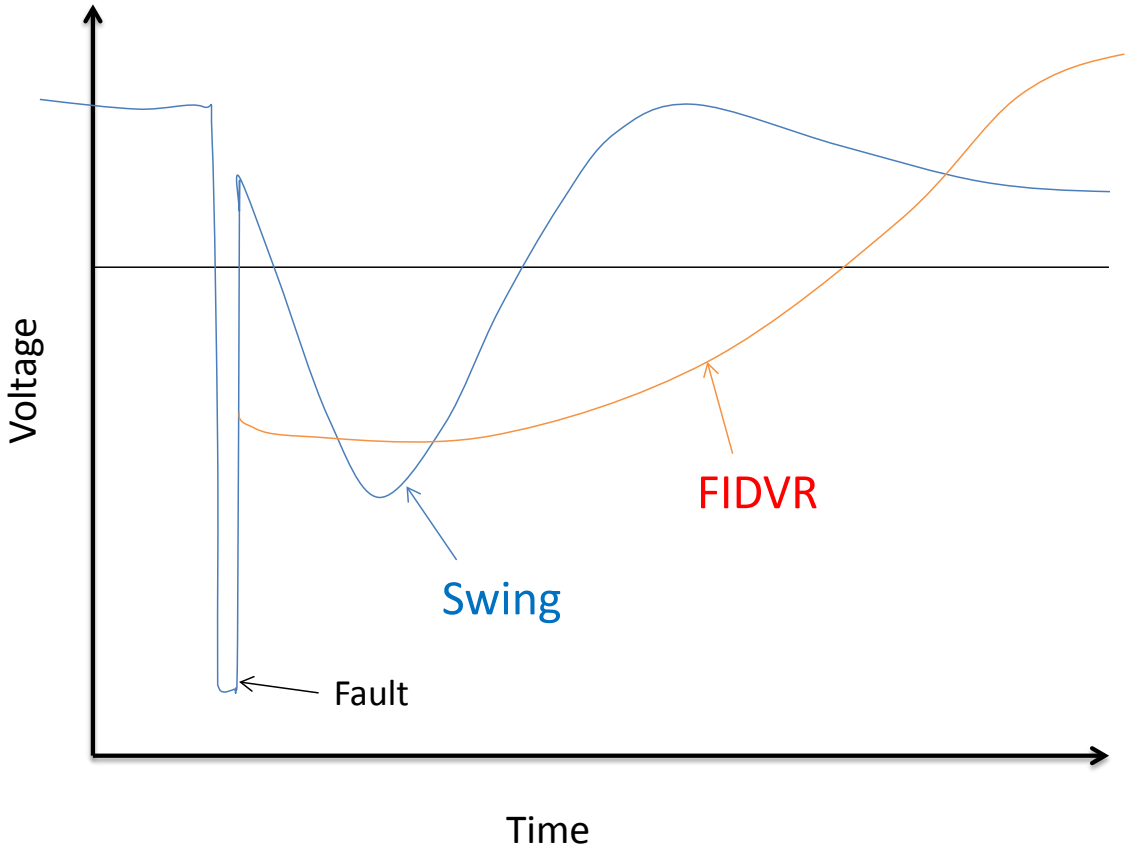

Figure 4: voltage swing versus FIDVR events

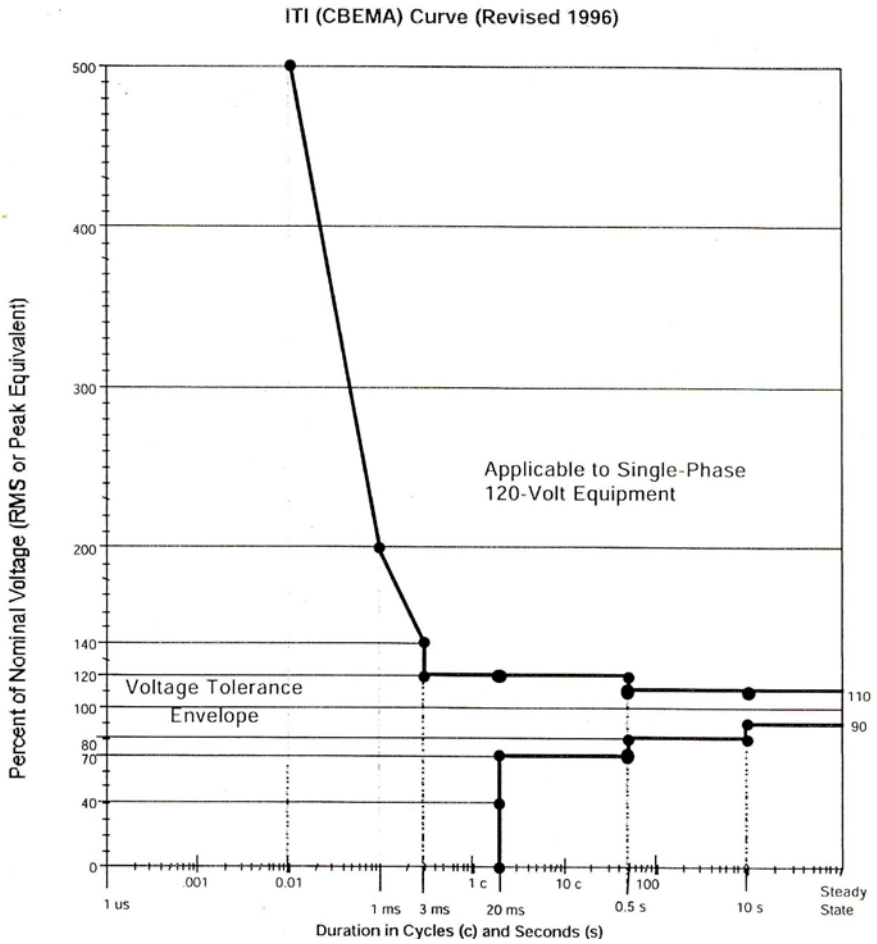

Figure 5. Information Technology Industry Courcil (ITIC, formerly CBEMA) voltage tolerance curve.

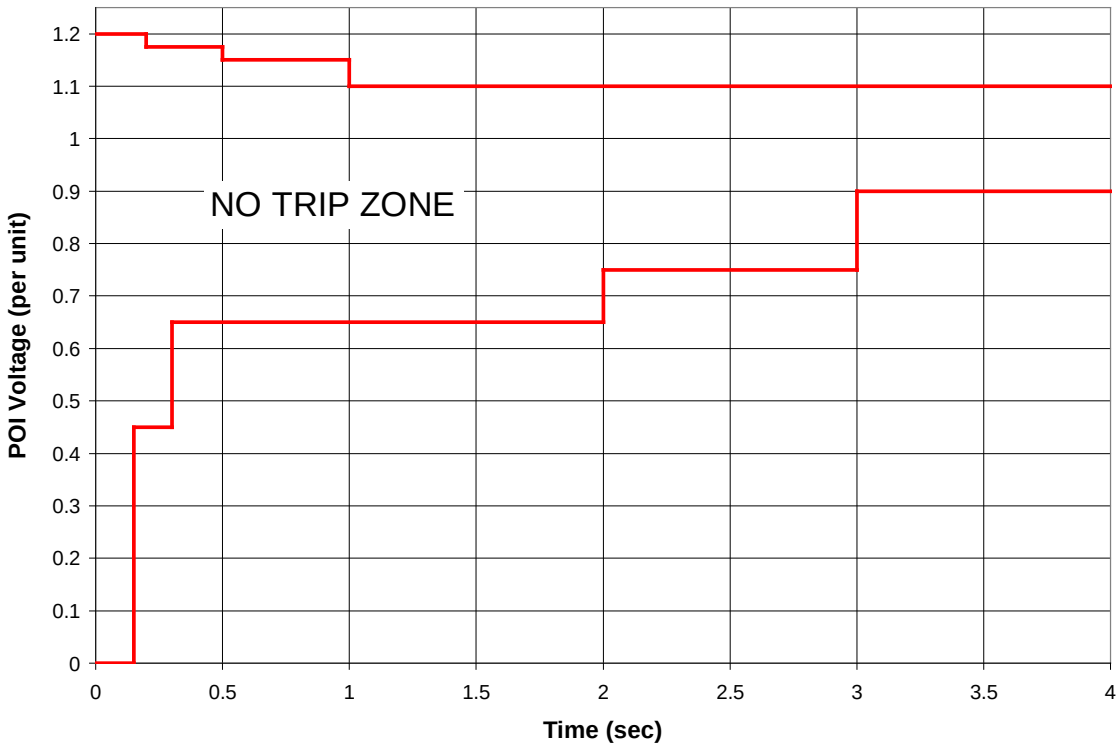

Figure 6: proposed voltage ride-through requirements for power plants

References

1. NERC White Paper on Delayed Voltage Recovery, posted at www.nerc.com
2. DOE-NERC FIDVR Workshop on April 22, 2008, presentations posted at www.nerc.com
3. DOE-NERC FIDVR Conference on September 29, 2009, presentations posted at www.nrec.com
4. Bradley Williams, Wayne Schmus, Douglas Dawson, "Transmission Voltage Recovery Delayed by Stalled Air Conditioner Compressors," *IEEE Transactions on Power Systems*, vol.7, no.3, pp.1173-1181, August 1992.
5. John Shaffer, "Air Conditioner Response to Transmission Faults", *IEEE Transactions on Power Systems*, vol.12, no.2, May 1997, pp.614-621.
6. Lee Taylor, S.M.Hsu, "Transmission Voltage Recovery Following a Fault Event in the Metro Atlanta Area," proceedings of the IEEE PES Summer Meeting, pp.537-542, July 2000.
7. Garry Chinn, "Modeling Stalled Induction Motors," presented at the IEEE Transmission and Distribution Conference, Dallas TX, May 2006.
8. Les Pereira, Dmitry Kosterev, Peter Mackin, Donald Davies, John Undrill, Wenchun Zhu, "An Interim Dynamic Induction Motor Model for Stability Studies in WSCC," *IEEE Transactions on Power Systems*, vol.17, no.4, November 2002, pp1108-1115.
9. Dmitry Kosterev, Anatoliy Meklin , John Undrill, Bernard Lesieutre, William Price, David Chassin, Richard Bravo, Steve Yang, "Load Modeling in Power System Studies: WECC Progress Update", presented at 2008 IEEE Power Engineering Society General Meeting, Pittsburgh, PA.
10. Lee Taylor, R.A. Jones, S.M.Halpin, "Development of Load Models for Fault-Induced Delayed Voltage Recovery Dynamic Studies", presented at 2008 IEEE Power Engineering Society General Meeting, Pittsburgh, PA.
11. K.Tomiyama, J.P.Daniel, S.Ihara, "Modeling Air Conditioner Load for Power System Studies," *IEEE Transactions on Power Systems*, vol.13, no.2, May 1998, pp.414–420.
12. IEEE Task Force on Load Representation for Dynamic Performance, "Standard Models for Power Flow and Dynamic Performance Simulation," *IEEE Transactions on Power Systems*, vol.10, no.3, August 1995, pp.1302-1313.
13. California Energy Commission, California Commercial End-Use Survey, *publication CEC 400-2006-005*, March 2006.
14. S.M.Halpin, R.A.Jones, L.Y.Taylor, "The MVA-Volt Index: A Screening Tool for Predicting Fault-Induced Low Voltage Problems on Bulk Transmission Systems", *IEEE Transactions on Power Systems*, vol.23, no.3, August 2008, pp.1205–1210.
15. S.M.Halpin, K.A.Hurley, R.A.Jones, L.Y.Taylor, "Slope-Permissive Under-Voltage Load Shed Relay for Delayed Voltage Recovery Mitigation", *IEEE Transactions on Power Systems*, vol.23, no.3, August 2008, pp.1211–1216.
16. D. J. Shoup, J. J. Paserba, C. W. Taylor, "A Survey of Current Practices for Transient Voltage Dip/Sag Criteria Related to Power System Stability," *Proceedings of IEEE/PES Power System Conference and Exposition*.